Multiple Access Techniques I

Course Code: CSC 3116 Course Title: Computer Networks

Dept. of Computer Science
Faculty of Science and Technology

Lecturer No:	3	**Week No:**		**Semester:**	Summer 22-23
Lecturer:	*Sharifa Rania Mahmud; rania@aiub.edu*				

Multiple Access Techniques

- Introduction
- Channelization Protocols
  - FDMA
  - TDMA
  - CDMA
- Controlled Access
  - Reservation
  - Pooling
  - Token-passing

Introduction

- Two sublayers:

1. **LLC (Logical Link Control)** sublayer
2. **MAC** (**Medium Access Control**) sublayer

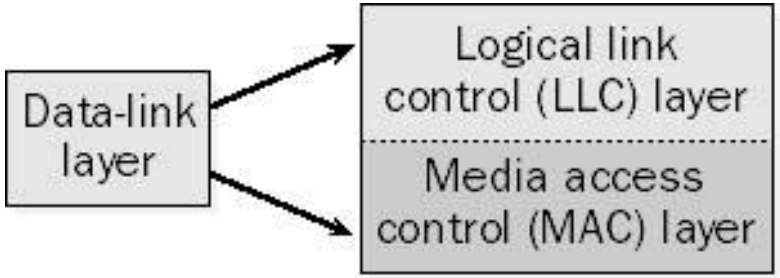

- The upper sublayer that is responsible for flow and error control is called the logical link control (LLC) layer;
- The lower sublayer that is mostly responsible for multiple access resolution is called the media access control (MAC) layer. When nodes or stations are connected and use a common link, called a multipoint or broadcast link, we need a multiple-access protocol to coordinate access to the link [1].

Introduction….

- Multiple access networks – multiple sending & receiving stations share the same transmission medium. Examples: LAN, cellular and satellite networks
- **Advantages:**
  - low cost infrastructure
  - all stations attached to the medium hear
  - transmission from any other station ⇒ routing not necessary
- **Disadvantages:**
  - access of multiple sending and receiving nodes to the shared medium must be coordinated
  - stations should not be transmitting simultaneously or interrupting each other
  - stations should not be able to 'monopolize' the transmission/shared medium

Introduction….

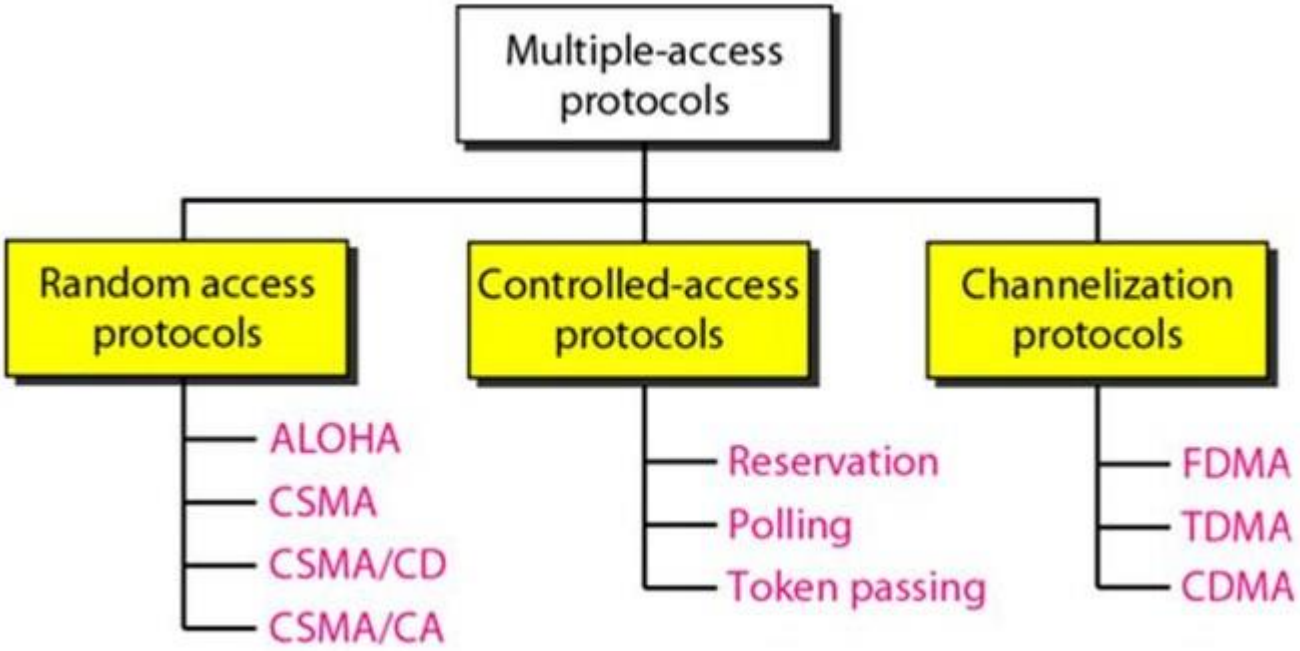

Fig. 1 Classification of multiple access protocols [1]

Channelization Protocols

Classification

- Channelization is a multiple access method in which the available bandwidth of a link is shared in ***time***, ***frequency*** or ***code*** between different stations.
- There are three basic channelization protocols:
  1. **Frequency Division Multiple Access (FDMA)**
  2. **Time Division Multiple Access (TDMA)**
  3. **Code Division Multiple Access (CDMA)**

Channelization Protocols….

FDMA

- In FDMA, the available bandwidth is divided into **frequency** bands.
- Each station is allocated a band to send its data.
- This band is reserved for that station for all the time.
- The frequency bands of different stations are separated by small bands of unused frequency.
- These unused bands are called guard bands that prevent station interferences.

Channelization Protocols….

FDMA

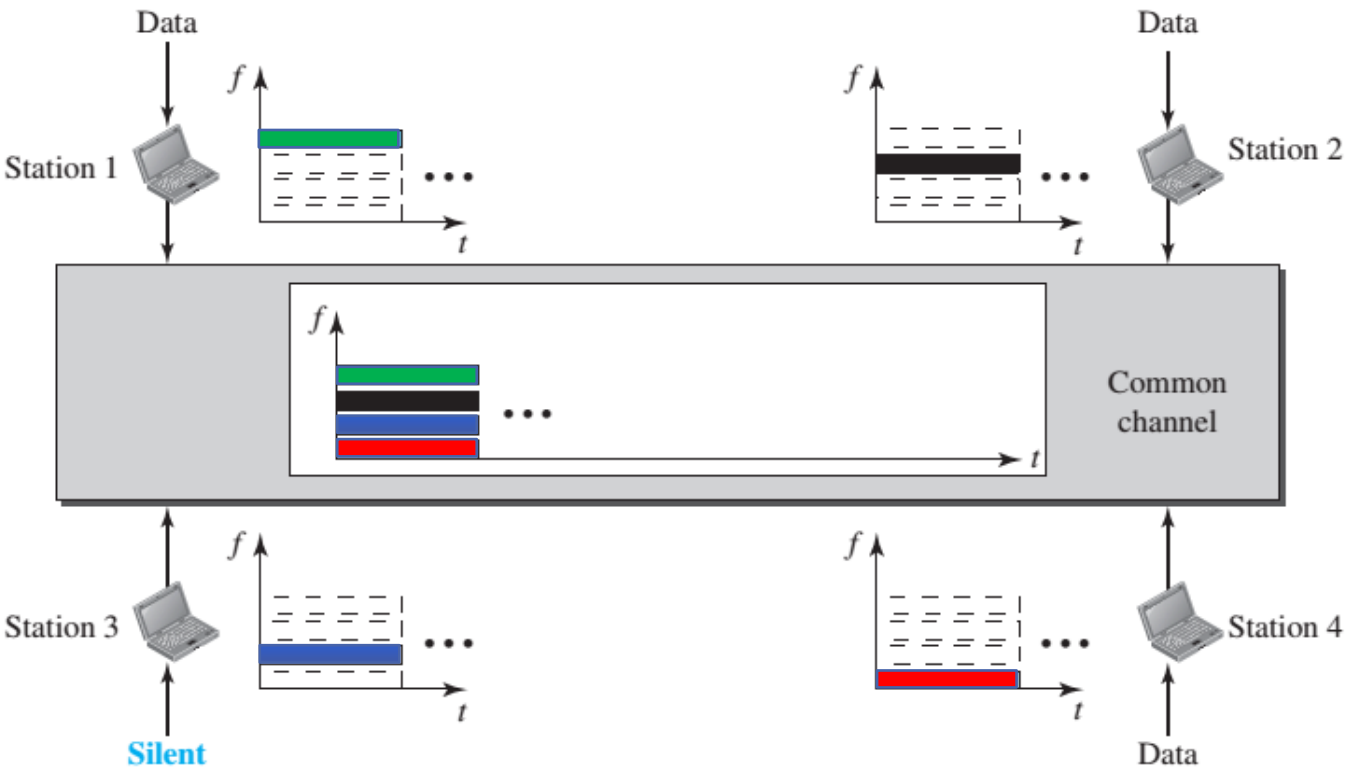

Fig. 2 Illustration of FDMA [1]

Channelization Protocols….

TDMA

- In TDMA, the bandwidth of channel is divided among various stations on the basis of time.
- Each station is allocated a time slot during which it can send its data.
- Each station must know the beginning of its time slot.
- TDMA requires synchronization between different stations.
- Synchronization is achieved by using some synchronization bits at the beginning of each slot [1].

Channelization Protocols….

TDMA

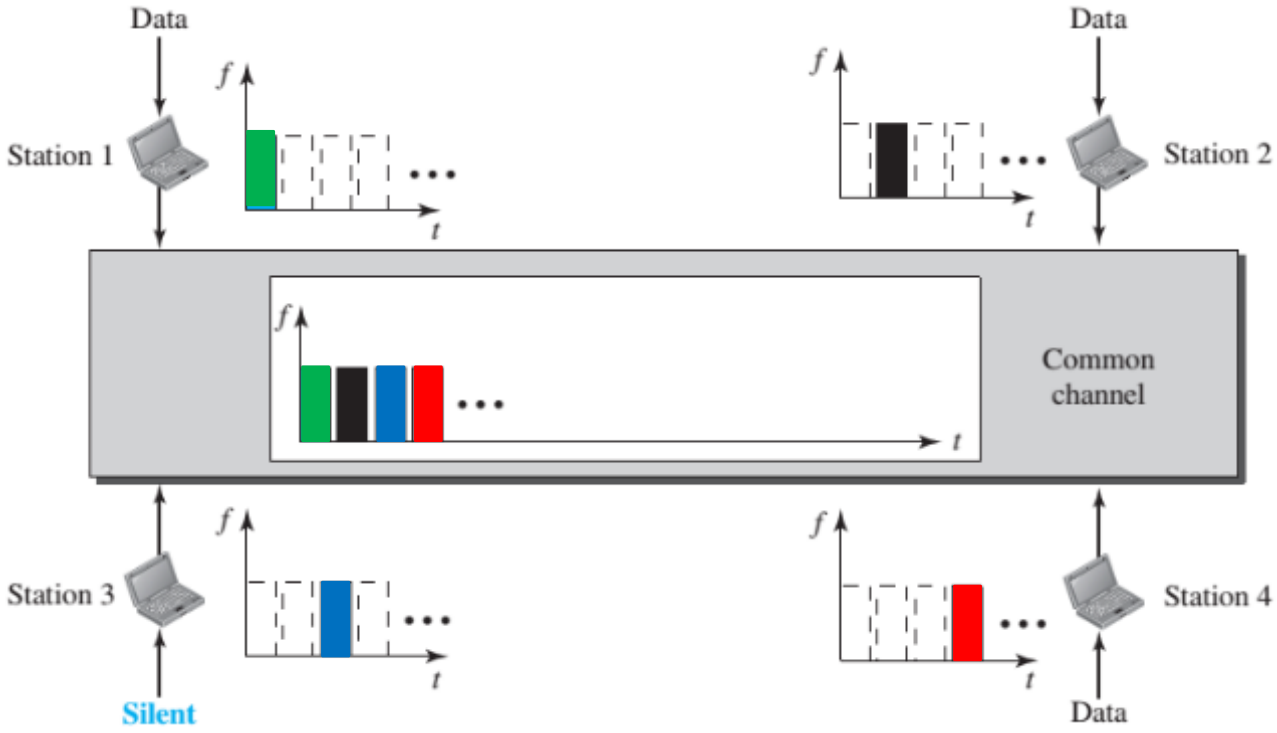

Fig. 3 Illustration of TDMA [1]

Channelization Protocols….

CDMA

- Unlike TDMA, in CDMA all stations can transmit data simultaneously.
- CDMA allows each station to transmit over the entire frequency spectrum all the time.
- Multiple simultaneous transmissions are separated using coding theory.
- In CDMA, each user is given a unique code sequence [1].

Working process of CDMA

- Let us assume that we have 4 stations: 1, 2, 3 and 4; those are connected to the same channel.
- The data from station 1 is d1, from station 2 is d2 and so on.
- The code assigned to station 1 is c1, station c2 and so on.
- These assigned codes have two properties:

- If we multiply each code by another, we get 0
- If we multiply each code by itself, we get 4 (no of stations)

Working process of CDMA

- When these four stations send data on the same channel., then station 1 multiplies its data by its code i.e. d1c1, station 2 multiplies its data by its code i.e. d2c2 and so on.

- The data that goes on the chancel is the sum of all these terms:

$$d1c1 + d2c2 + d3c3 + d4c4$$

- Any station that wants to receive data from the channel multiplies the data on the channel by the code of the sender.

Working process of CDMA

- For e.g. suppose station 2 wants to receive data from station 1
- It multiplies the data on the channel by c1, (code of station 1)
- Because (c1, c1) is 4, but (c2, c1), (c3,c1) and (c4,c1) are all 0s, station 2 divides the result by 4 to get the data from station 1.

$$\text{data} = (d1c1 + d2c2 + d3c3 + d4c4).c1$$

$$= d1.c1.c1 + d2.c2.c1 + d3.c3.c1 + d4.c4.c1$$

$$= d1.4 + 0 + 0 + 0$$

$$=(d1.4)/4 = d1$$

CDMA

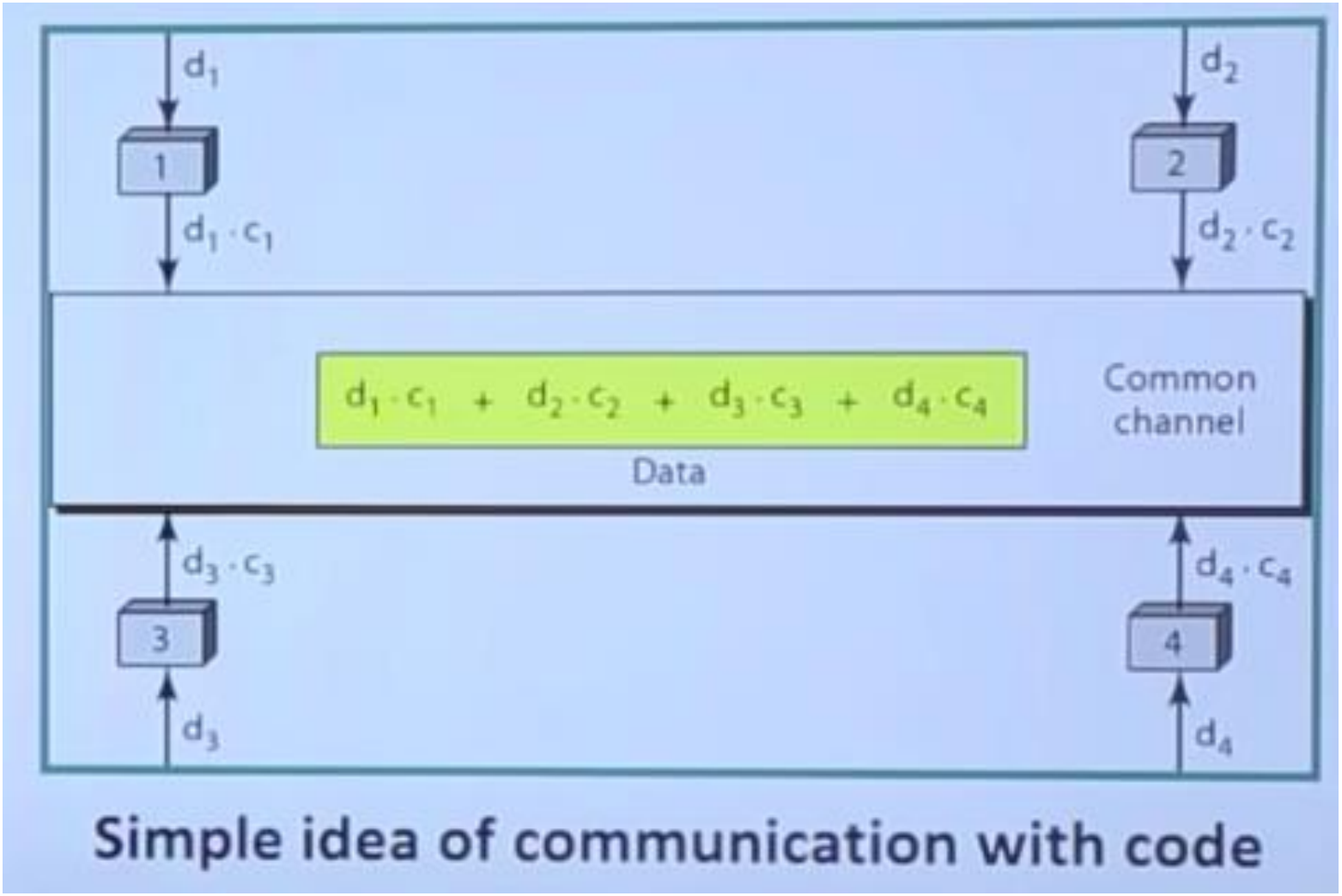
d_1
d_2
1
2
$d_1 \cdot c_1$
$d_2 \cdot c_2$
$d_1 \cdot c_1 + d_2 \cdot c_2 + d_3 \cdot c_3 + d_4 \cdot c_4$
Data
Common channel
$d_3 \cdot c_3$
$d_4 \cdot c_4$
3
4
d_3
d_4
Simple idea of communication with code

Channelization Protocols….

CDMA

❖ How to generate codes?

$$H = [1]$$

$$H^2 = \begin{bmatrix} H^1 & H^1 \\ H^1 & -H^1 \end{bmatrix}$$

$$H^2 = \begin{bmatrix} 1 & 1 \\ 1 & -1 \end{bmatrix}$$

$$H^4 = \begin{bmatrix} H^2 & H^2 \\ H^2 & -H^2 \end{bmatrix}$$

$$H^4 = \begin{bmatrix} 1 & 1 & 1 & 1 \\ 1 & -1 & 1 & -1 \\ 1 & 1 & -1 & -1 \\ 1 & -1 & -1 & 1 \end{bmatrix}$$

- Each row of H is a code of a user.
- Codes are orthogonal to each other. That is, multiplying any two code results in a zero.

$$H^8 = \begin{bmatrix} H^4 & H^4 \\ H^4 & -H^4 \end{bmatrix}$$

$$H^8 = \begin{bmatrix} 1 & 1 & 1 & 1 & 1 & 1 & 1 & 1 \\ 1 & -1 & 1 & -1 & 1 & -1 & 1 & -1 \\ 1 & 1 & -1 & -1 & 1 & 1 & -1 & -1 \\ 1 & -1 & -1 & 1 & 1 & -1 & -1 & 1 \\ 1 & 1 & 1 & 1 & -1 & -1 & -1 & -1 \\ 1 & -1 & 1 & -1 & -1 & 1 & -1 & 1 \\ 1 & 1 & -1 & -1 & -1 & -1 & 1 & 1 \\ 1 & -1 & -1 & 1 & -1 & 1 & 1 & -1 \end{bmatrix}$$

H^4 H^4 H^4 $-H^4$

Channelization Protocols….

CDMA

- Suppose there are five users A, B, C, D and E. They want to send 0, +1, +1, -1, -1 bits, respectively. Generate the code for each user and find the transmit sequence. Suppose that a user G wants to decode the information sent from the user B. How can he do this?

  - Since the number of users is 5, use H^8
  - Multiply user code by his bit
  - Add the results of the multiplication

Channelization Protocols….

CDMA

$$
\begin{array}{rl}
0 \times R1 = & [0 \quad 0 \quad 0 \quad 0 \quad 0 \quad 0 \quad 0 \quad 0] \\
1 \times R2 = & [1 \quad -1 \quad 1 \quad -1 \quad 1 \quad -1 \quad 1 \quad -1] \\
1 \times R3 = & [1 \quad 1 \quad -1 \quad -1 \quad 1 \quad 1 \quad -1 \quad -1] \\
-1 \times R4 = & [-1 \quad 1 \quad 1 \quad -1 \quad -1 \quad 1 \quad 1 \quad -1] \\
-1 \times R5 = & [-1 \quad -1 \quad -1 \quad -1 \quad 1 \quad 1 \quad 1 \quad 1] \\
\hline
 & [0 \quad 0 \quad 0 \quad -4 \quad 2 \quad 2 \quad 2 \quad -2]
\end{array}
$$

$$
H^8 = \begin{bmatrix}
1 & 1 & 1 & 1 & 1 & 1 & 1 & 1 \\
1 & -1 & 1 & -1 & 1 & -1 & 1 & -1 \\
1 & 1 & -1 & -1 & 1 & 1 & -1 & -1 \\
1 & -1 & -1 & 1 & 1 & -1 & -1 & 1 \\
1 & 1 & 1 & 1 & -1 & -1 & -1 & -1 \\
1 & -1 & 1 & -1 & -1 & 1 & -1 & 1 \\
1 & 1 & -1 & -1 & -1 & -1 & 1 & 1 \\
1 & -1 & -1 & 1 & -1 & 1 & 1 & -1
\end{bmatrix}
$$

Transmit sequence: $[0 \quad 0 \quad 0 \quad -4 \quad 2 \quad 2 \quad 2 \quad -2]$

Channelization Protocols….

CDMA

Recovery of the bit sent from user B

$$Received\ sequence \times Desired\ user's\ (B's)\ code$$

$$[0 \quad 0 \quad 0 \quad -4 \quad 2 \quad 2 \quad 2 \quad -2] \times [1 \quad -1 \quad 1 \quad -1 \quad 1 \quad -1 \quad 1 \quad -1]$$

$$[0 \quad 0 \quad 0 \quad -4 \quad 2 \quad 2 \quad 2 \quad -2] \begin{bmatrix} 1 \\ -1 \\ 1 \\ -1 \\ 1 \\ -1 \\ 1 \\ -1 \end{bmatrix}$$

$$= 0 \times 1 + 0 \times -1 + 0 \times 1 - 4 \times -1 + 2 \times 1 + 2 \times -1 + 2 \times 1 - 2 \times -1$$

$$= 0 + 0 + 0 + 4 + 2 - 2 + 2 + 2$$

$$= 8$$

The bit sent from user B $= Received\ sequence \times B's\ code\ /(length\ of\ the\ code)$

$= 8/8 = 1$

Task

CDMA

- Suppose there are four users A, B, C, and D. They want to send -3, +1, +5, and -1, respectively. Generate the code for each user and find the transmit sequence. Suppose that a user B wants to decode the information sent from the user A. How can he do this?

Controlled Access

Classification

- In controlled access, the stations consult one another to find which station has the right to send. A station cannot send unless it has been authorized by other stations. We discuss three popular controlled-access methods.

1. Reservation
2. Polling
3. Token Passing [1]

Controlled Access….

Reservation

- In the reservation method, a station needs to make a reservation before sending data. Time is divided into intervals. In each interval, a reservation frame precedes the data frames sent in that interval.
- **How it Works:**
- If there are N stations in the system, there are exactly N reservation minislots in the reservation frame. Each minislot belongs to a station. When a station needs to send a data frame, it makes a reservation in its own minislot. The stations that have made reservations can send their data frames after the reservation frame.

Controlled Access....

Reservation

- In the following figure shows a situation with five stations and a five-minislot reservation frame. In the first interval, only stations 1, 3, and 4 have made reservations. In the second interval, only station 1 has made a reservation [1].

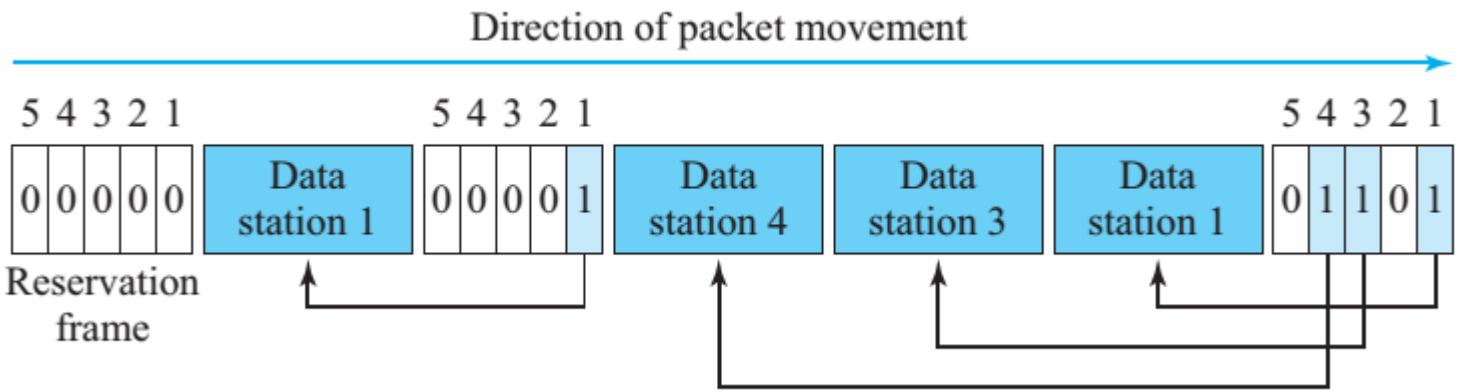

Fig 4: Reservation access method

Controlled Access….

Pooling

- Polling works with topologies in which one device is designated as a primary station and the other devices are secondary stations.
- All data exchanges must be made through the primary device even when the ultimate destination is a secondary device.
- The primary device controls the link; the secondary devices follow its instructions.
- It is up to the primary device to determine which device is allowed to use the channel at a given time. The primary device, therefore, is always the initiator of a session [1].

Controlled Access….

Pooling….

- If the primary wants to receive data, it asks the secondaries if they have anything to send; this is called **poll function**. If the primary wants to send data, it tells the secondary to get ready to receive; this is called **select function**.

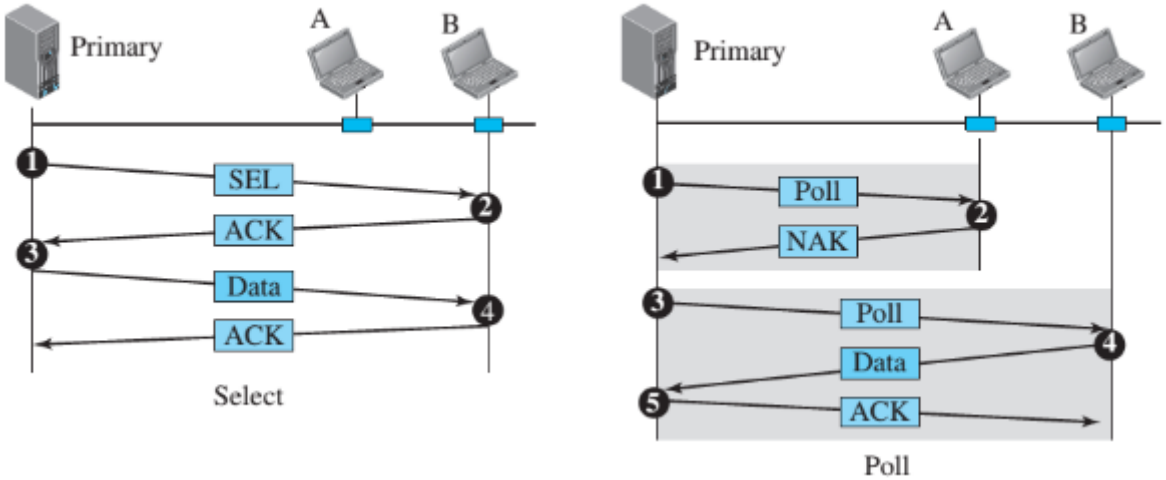

Fig 5: Select and poll functions in polling access method

Controlled Access….

Token-passing method

- In the token-passing method, the stations in a network are organized in a logical ring. In other words, for each station, there is a predecessor and a successor. The predecessor is the station which is logically before the station in the ring; the successor is the station which is after the station in the ring.
- **How it works:**
  - In this method, a special packet called a token circulates through the ring. The possession of the token gives the station the right to access the channel and send its data.
  - When a station has some data to send, it waits until it receives the token from its predecessor. It then holds the token and sends its data. When the station has no more data to send, it releases the token, passing it to the next logical station in the ring.

Controlled Access….

Token-passing method…

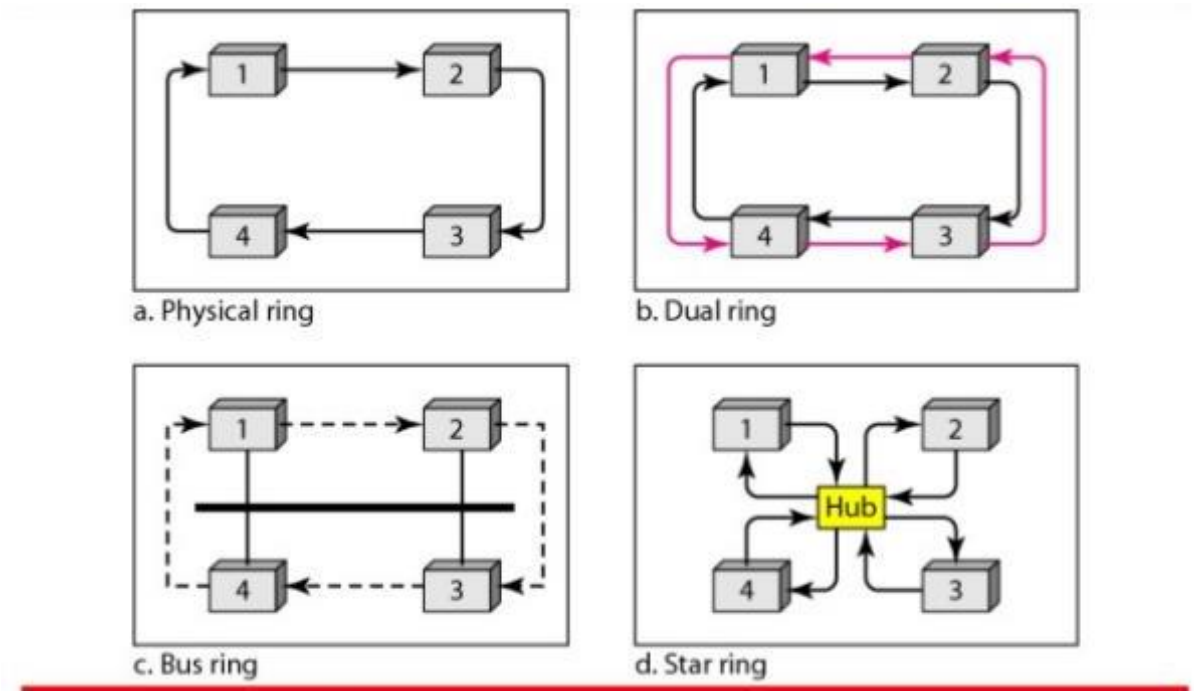

Fig 6: Logical ring and physical topology in token-passing access method [1]

References

[1] B. A. Forouzan, *Data Communication and Networking*, 5th ed., The McGraw-Hill Companies, Inc., USA, 2013, pp. 341-352.

Recommended Books

1. **Data Communications and Networking**, *B. A. Forouzan*, McGraw-Hill, Inc., Fourth Edition, 2007, USA.
2. **Computer Networking: A Top-Down Approach**, *J. F., Kurose, K. W. Ross*, Pearson Education, Inc., Sixth Edition, USA.
3. **Official Cert Guide CCNA 200-301 , vol. 1**, *W. Odom*, Cisco Press, First Edition, 2019, USA.
4. **CCNA Routing and Switching**, *T. Lammle*, John Wily & Sons, Second Edition, 2016, USA.
5. **TCP/IP Protocol Suite**, *B. A. Forouzan*, McGraw-Hill, Inc., Fourth Edition, 2009, USA.
6. **Data and Computer Communication**, *W. Stallings*, Pearson Education, Inc., Tenth Education, 2013, USA.